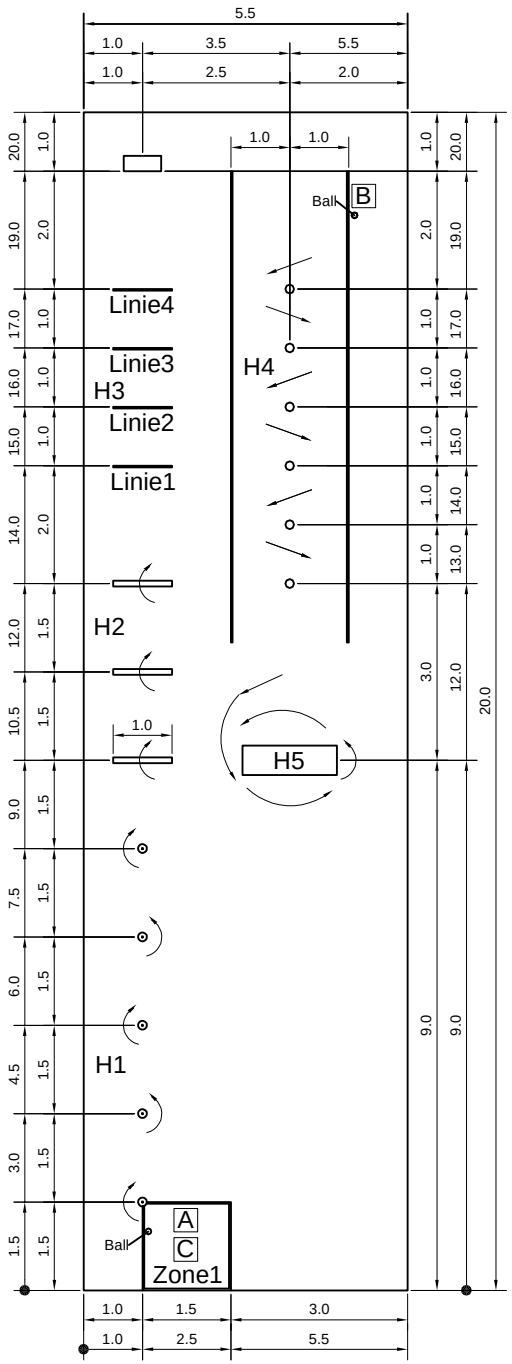
5.5
1.0
3.5
5.5
1.0
2.5
2.0
Ball
B
Linie4
Linie3
H3
Linie2
Linie1
H4
H2
H5
H1
A
C
Zone1
Ball
20.0
19.0
17.0
16.0
15.0
14.0
12.0
10.5
9.0
7.5
6.0
4.5
3.0
1.5
13.0
3.0
9.0

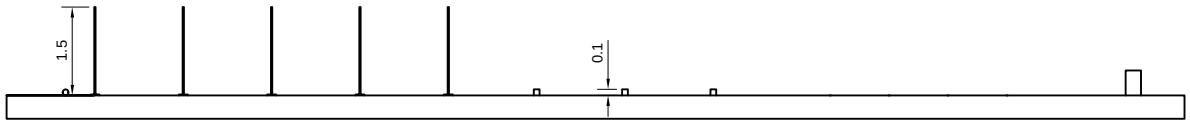
1.5
0.1
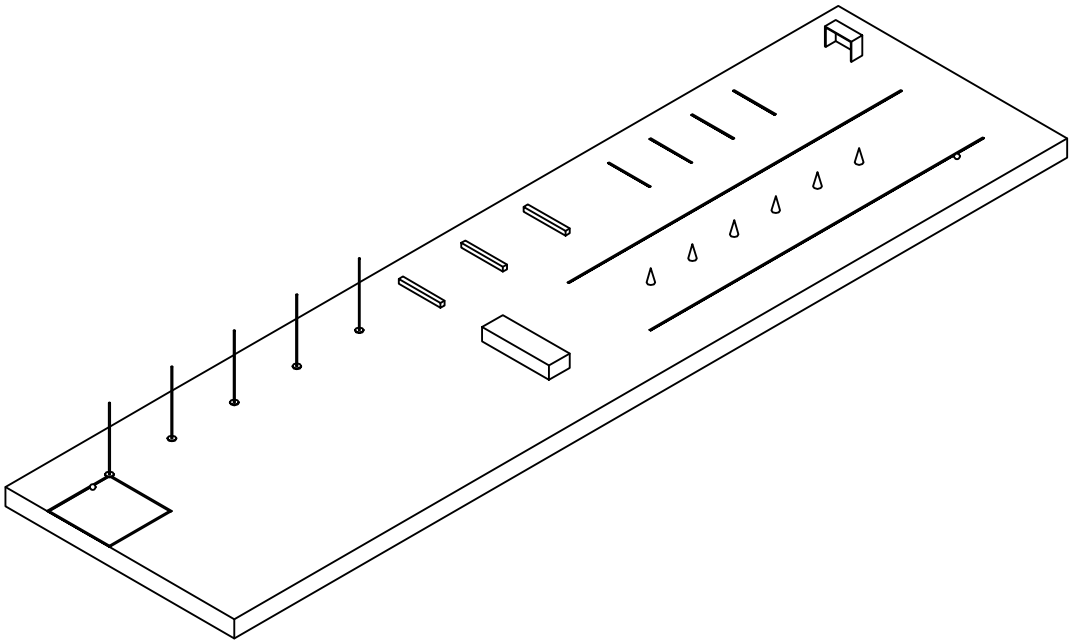
0.2-0.3